Different installation possibilities of Halo (position light) with remote control.

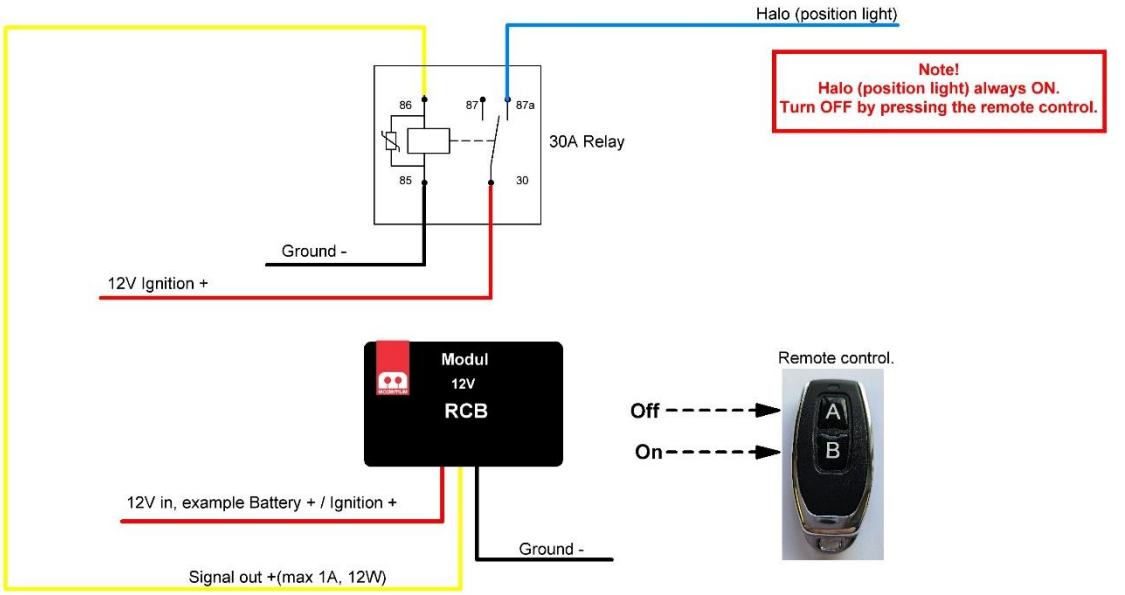

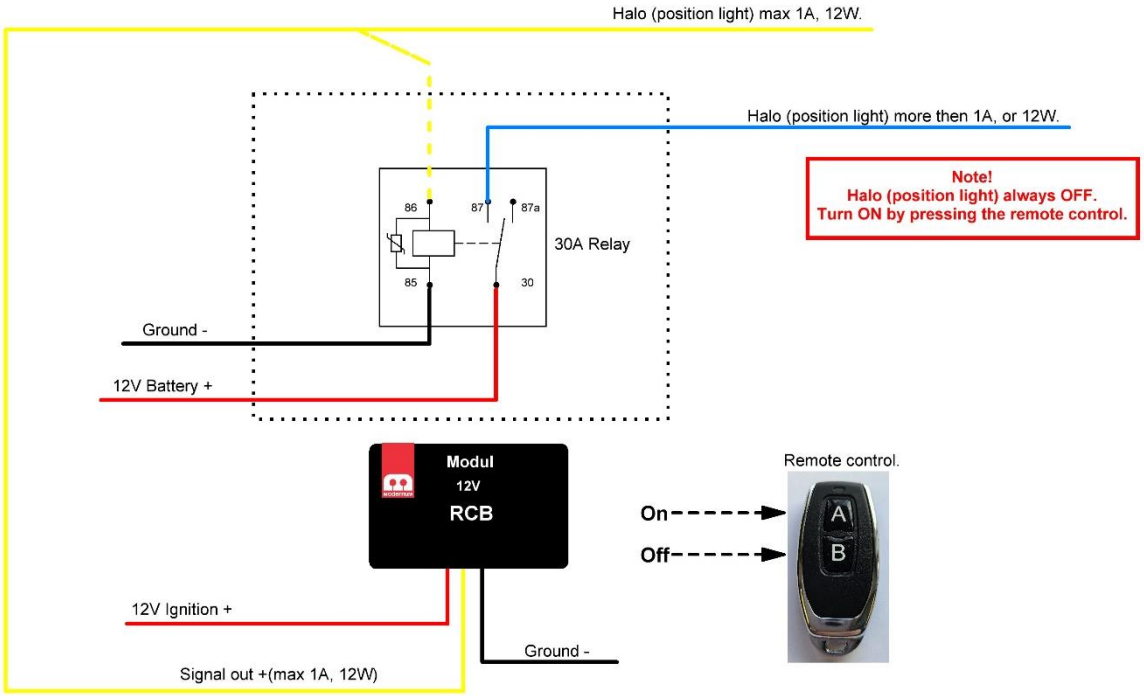

Modernum AB
Johanneslundsvägen 12, 6tr
194 61 Upplands Väsby
www.modernum.se
info@modernum.se